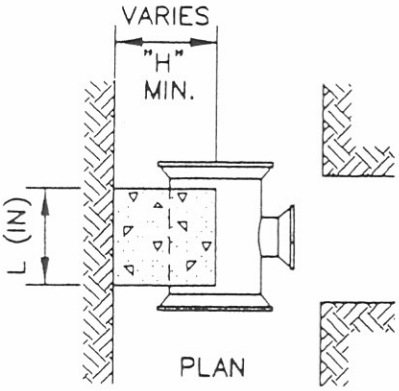

PLAN

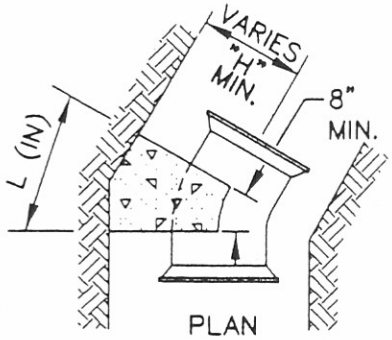

PLAN
VARIOUS BENDS

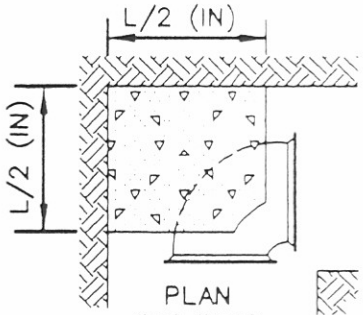

PLAN
90I BEND

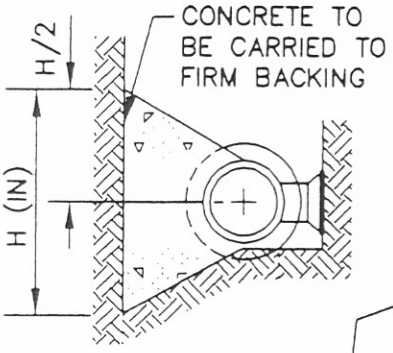

ELEVATION

TEE

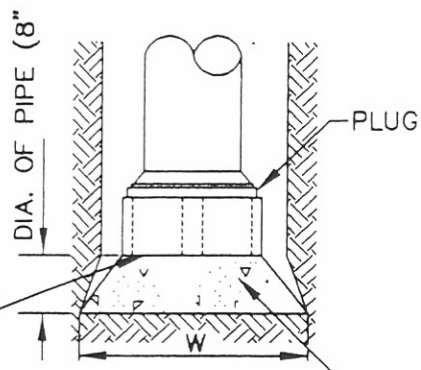

PLACE FILL CONCRETE.
"W"= MAXIMUM TRENCH WIDTH
PER SD-118, SYMMETRICAL
ABOUT ℄ OF PIPE.
HEIGHT = 2 X DIA. OF PIPE.

8"X 8"X 16"
CONCRETE BLOCK

END OF LINE

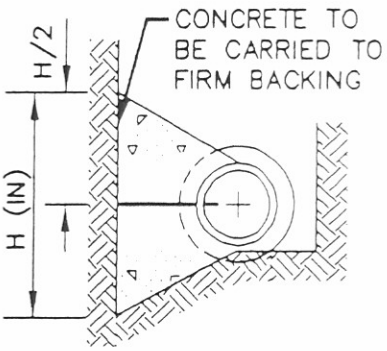

ELEVATION

HORIZONTAL BENDS

L & H DIMENSIONS ARE IN INCHES

RUN	BRANCH													
	2"		3"		4"		6"		8"		10"		12"	
	L	H	L	H	L	H	L	H	L	H	L	H	L	H
2"	6	5												
3"	6	5	8	6										
4"	6	5	8	6	12	7								
6"	6	6	8	6	10	8	15	12						
8"	6	8	6	8	10	8	15	12	18	18				
10"	6	10	6	10	8	10	15	12	18	18	22	22		
12"	6	12	6	12	7	12	15	12	18	18	22	22	24	29
14"	6	14	6	14	6	14	13	14	18	18	22	22	26	27

NOTE: USE FILL CONCRETE. DESIGN BASED ON A WORKING PRESSURE OF 125 PSI AND A SOIL BEARING OF 3000 LB./SQ. FT.

SIZE OF PIPE	DEGREE OF BEND							
	$11^{1/4}$°		$22^{1/2}$°		45°		90°	
	L	H	L	H	L	H	L	H
2"	4	3	4	4	5	4	10	5
3"	4	3	5	4	7	5	16	6
4"	5	4	7	5	10	6	20	8
6"	6	6	10	7	17	8	30	12
8"	8	8	14	9	19	13	36	18
10"	10	10	17	11	22	17	44	22
12"	12	12	19	15	24	22	48	29
14"	14	14	20	19	25	29	52	36
16"	16	16	20	24	27	35	58	42
18"	18	18	22	28	28	42	62	50
20"	20	20	25	30	32	46	68	56
24"	23	24	29	37	36	58	80	68

CITY OF NEW PHILADELPHIA

THRUST BLOCKING DETAILS
HORIZONTAL BENDS

STANDARD CONSTRUCTION DRAWING NO.

SD-100

REV. 1-94